UE ElecAna3: Project "Design of an electrical interface for an accelerometer based on micromachined microelectromechanical device"

Dimitri Galayko

The goal of this session is to implement and to simulate the accelerometer operating in closed loop and achieving a sigma-delta modulation of the signal.

1 An accelerometer with digital output: a sigma-delta modulator

After having implemented a PI filter and a sample and hold, we need to close the loop in order to generate the voltages applied to the actuators, which will generate the feedback force.

Using of a sigma-delta modulator has two advantages comparing to an analog continuous signal or PWM closed loop:

– Reduction of harmonics related to PWM modulation : in a Sigma-Delta modulator, the quantisation error is a noise and not a periodic signal, its energy is distributed over wide frequency range, and if a narrow band is considered, a larger signal to noise ratio can be obtained.

– The output is a digital signal compatible with standard techniques of digital signal processing.

– The feedback of the sigma-delta actuator is a two-valued function (± 1), so, we are not sensitive to the nonlinearities of the actuators (note, that the force generated by capacitive transducers is proportional to the square of the voltage).

The architecture of the system is given in fig. fig. 1.

Starting from the cells you already implemented (the readout circuit, the PI filter and the sample-and-hold), complete the schematic so to implement the sigma-delta loop. The remaining blocks which you need to add are the 1 bit digital-to-analog converters (a simple comparator that you can find in the ahdlLib library, cell *comparator*) and digital inverters (cell *nand_gate*).

For the PI filter, you need to set up the coefficients values to Kp=10, Ki=0.1 s^{-1}. Take the 1 pF value for the sampling capacitance of the integrator, and 30 volts for Vfb voltage (cf. schematic).

To be done: Model the system with, at the input, a source of sinusoidal acceleration, of 10 ms^{-1} amplitude and 100 Hz frequency. For this simulation, compute the FFT (Fast Fourier Transform) of the sigma-delta signal output and highlight the noise shaping specific to a sigma delta loop. For that, you needs to use the cell "a2d" provided by the instructor, which allows a saving of the output digital sequence into a file. Then, the digital sequence can be directly analyzed with Matlab.

2 Bibliographie

[1] B. V. Amini, R. Abdoulvand, F. Ayazi, A 4.5-mW closed-loop $\Sigma\Delta$ micro-gravity CMOS SOI accelerometer, IEEE journal of solid state circuits, vol. 41, no. 12, december 2006

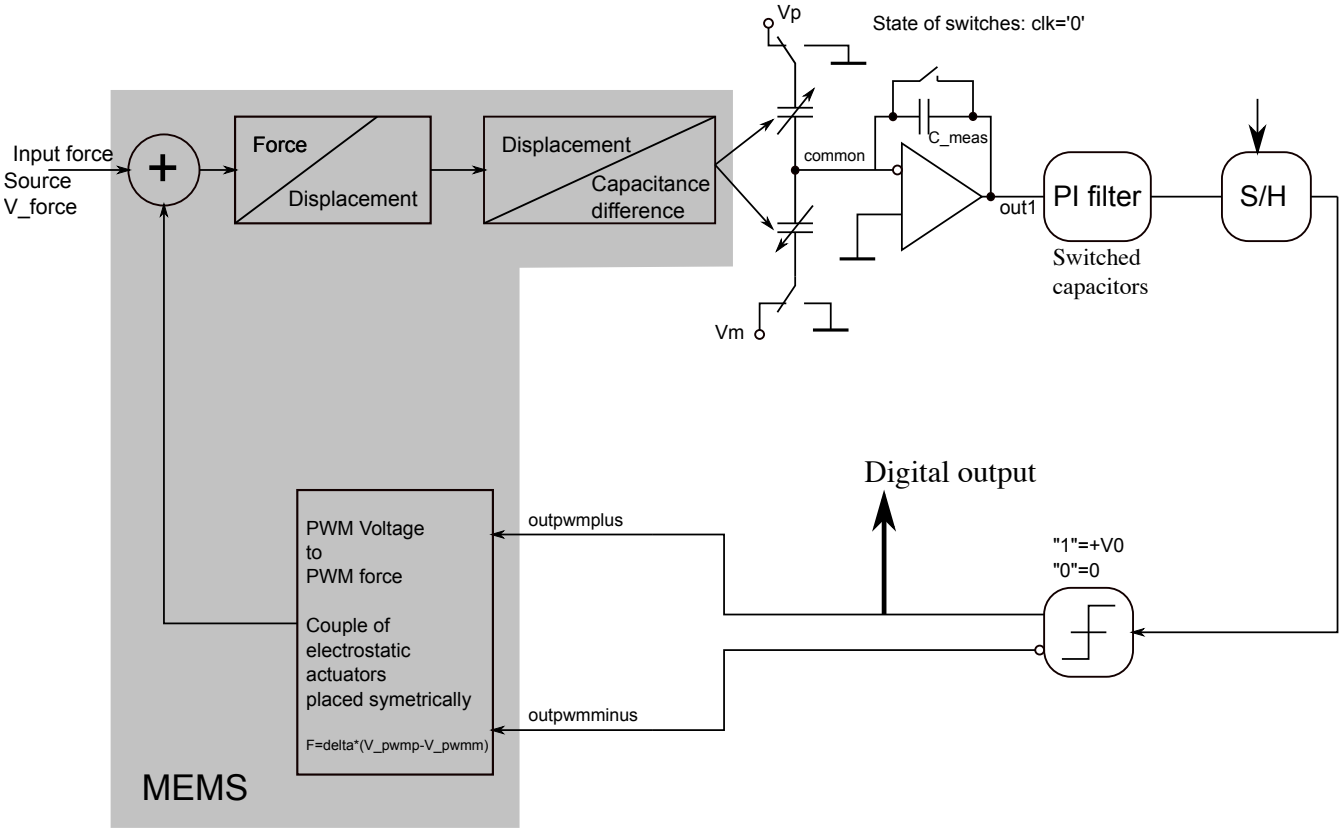
Vp
State of switches: clk='0'
Input force
Source
V_force
+
Force
Displacement
Displacement
Capacitance
difference
common
C_meas
out1
PI filter
S/H
Switched
capacitors
Vm
Digital output
PWM Voltage
to
PWM force
Couple of
electrostatic
actuators
placed symetrically
F=delta*(V_pwmp-V_pwmm)
outpwmplus
outpwmminus
"1"=+V0
"0"=0
MEMS

Figure 1: