UE ElecAna3 : Project "Design of an electrical interface for an accelerometer based on micromachined microelectromechanical device"

Dimitri Galayko

1 Introduction

The goal of this project is to design a complete system allowing to measure the acceleration. The system is composed of the following parts :

– A mechanical sensor including a resonator and capacitive transducers,

– An interface circuit allowing a measure of the value of the transducer capacitance. The transducer capacitances is in a one-to-one relation with the position of the mobile mass,

– A feedback based measurement electronics whose goal is to digitize the signal, while improving the intrinsic performances of the electromechanical sensor,

The goal of the project is to study the electronic circuit implementing the interface with the MEMS device.

In the first part of the project, we study the interface circuits measuring and processing the information provided by the MEMS device.

2 Presentation of the electromechanical device (MEMS)

The MEMS device used for the acceleration measurement is composed of a mechanical resonator (mass+spring), of capacitive transducers allowing a read-out of the instantaneous displacement of the mobile mass, and of capacitive actuators allowing an active control of the mobile mass position. In particular, the actuators will be used to implement a feedback loop.

The MEMS device used in this project is inspired from the work of Amini Babak (Georgia Tech, USA, 2006) [1]. Its structure is presented in fig. 1.

The resonator is composed of a mass (the bulky structure visible in the middle of the figure) held by 4 springs. The resonator is characterized by three macroscopic (lumped) parameters : the mass m, the total stiffness k, the damping coefficient μ. The values of these parameters used in this project are given in table 1.

At the left and at the right sides of the mass (as presented in the figure), there two sets of N capacitive transducers for the displacement measurement. The capacitance of each transducer is a function of a displacement, given by the equations :

$$C(x) = \varepsilon_0 \frac{S}{d_{0t} - x} \tag{1}$$

for the set of transducers of the left side connected to the *Cminus* electrode, and

$$C(x) = \varepsilon_0 \frac{S}{d_{0t} + x} \tag{2}$$

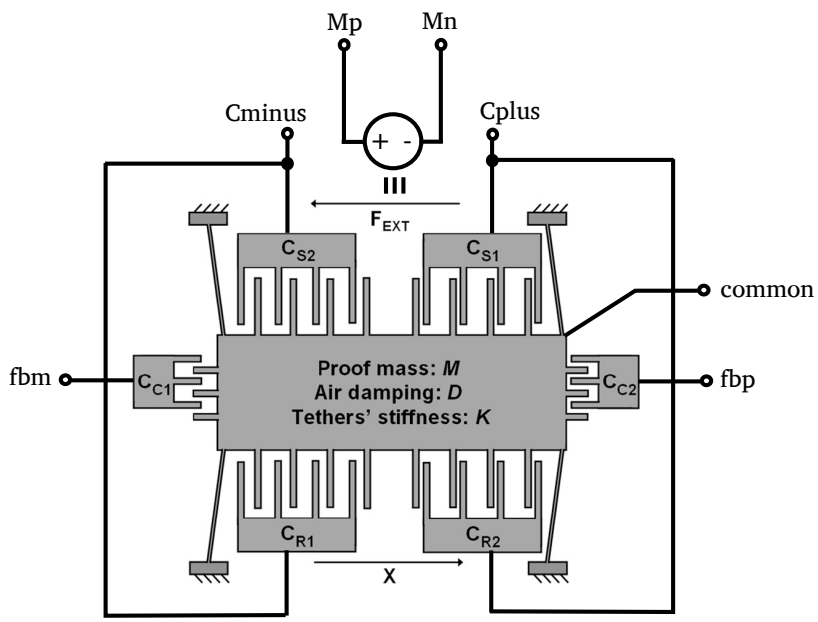

FIGURE 1 – Structure of the MEMS device used for the acceleration measurement and electrical interface of the device model used in the project.

for the set of transducers of the right side connected to the *Cplus* electrode. Here d_{0t} is the initial distance between the electrodes, S is the total overlapping area. In this way, the position is given as a difference between the capacitances :

$$\Delta C(x) = Cplus - Cminus = \varepsilon \frac{2Sx}{d_{0t}^2 - x^2}. \tag{3}$$

The function $\Delta C(x)$ is linear for small variations of x :

$$\Delta C(x) \approx Cplus - Cminus = \varepsilon \frac{2S}{d_{0t}^2} x. \tag{4}$$

The capacitive transducers which are on the top and on the bottom implement capacitive actuators. Their capacitances variation is given by the function :

$$C(x) = \varepsilon_0 \frac{h(l_0 \pm x}{d_{0a}} \tag{5}$$

When a voltage is applied between the electrode *common* and the electrodes fbm et fbp, each actuator applies on the mobile mass a force given by :

$$F = \frac{1}{2} V^2 \frac{\partial C}{\partial x} = \pm \varepsilon_0 \frac{h}{d_{0a}} \tag{6}$$

Here l_0 is the overlapping length of the fingers, h is the thickness of the structure (in the direction perpendicular to the picture) multiplied by the number of fingers, d_{0a} is the gap between the electrodes.

Two actuators generate a force in opposite directions, which yields for the total force :

$$F = \varepsilon_0 \frac{h}{d_{0a}} (V_{fbp}^2 - V_{fbm}^2). \tag{7}$$

The action of the external acceleration on the mobile mass is modeled by an equivalent force applied to the mobile mass. This force is given by $F_{ext} = -ma_{ext}$, where a_{ext} is the external acceleration. In our model, this force is represented by a voltage source applied between the electrodes Mp et Mn.

Without a feedback (a voltage applied to the actuators), the transducer is able to measure the acceleration at low frequency whose amplitude is under 30 ms^{-2} (3g). That corresponds to the displacement of the mass of 3 μm.

The device is modeled by a *VHDL-AMS* model and is represented in the Cadence environment by a cell *MEMS_accelerometer_feedback*. This cell has a view *entity* for the VHDL-AMS model and a view *symbol* for use in a schematic. The model has three additional terminals introduced for test purposes. The terminals generates voltages equal to instantaneous displacement of the mobile mass (electrode *pos*) and to the capacitance value of the two transducers (electrodes *capa_plus* and *capa_minus*).

Parameter	symbol	value
Resonator mass	m	$4.14 \cdot 10^{-6}\ kg$
Resonator stiffness	k	$40\ Nm^{-1}$
Resonator damping	μ	$4.3 \cdot 10^{-2}\ N \cdot s \cdot m^{-1}$
Transducer gap	d_{0t}	4μm
Total overlapping area of transducers	S	$3.6 \cdot 10^{-6}$ m^2
Actuator gap	d_{0a}	4 μm
Actuator initial overlapping length	l_0	100 μm
Product "structure thickness – number of fingers"	h	0.12 m

TABLE 1 – Parameters of the MEMS device.

2.1 Exercice 1 : Mechanical test of the accelerometer and first steps in the Cadence environment

Step 1. In the Cadence environment, create a new cell *test_accelerometer*, create a new view *schematic*, place the accelerometer symbol and set up the correct parameters corresponding to the table 1. Apply an external force corresponding to 10 ms^{-2} acceleration at frequency 50 Hz. Connect to the mass all electrical terminals of the transducer. Run a transient simulation. Consider the displacement of the structure and the variation of the transducer capacitances *Cminus* and *Cplus*.

Step 2. In the same the previous schematic, connect a DC voltage source 20 V between *fbp* and the ground. Run again the transient simulation. How the trajectory of the mass changed ?

3 Readout of the transducer capacitances

In order to convert the difference between the transducer capacitances into a voltage, we use a circuit exploiting the technique of switched capacitors. Its schematic is given in fig. 2.

Theoretical question. Prove that at the high state of *clk_bar*, the output voltage is given by :

$$V_{out} = V_p \frac{C_{plus} - C_{minus}}{C_{meas}}. \tag{8}$$

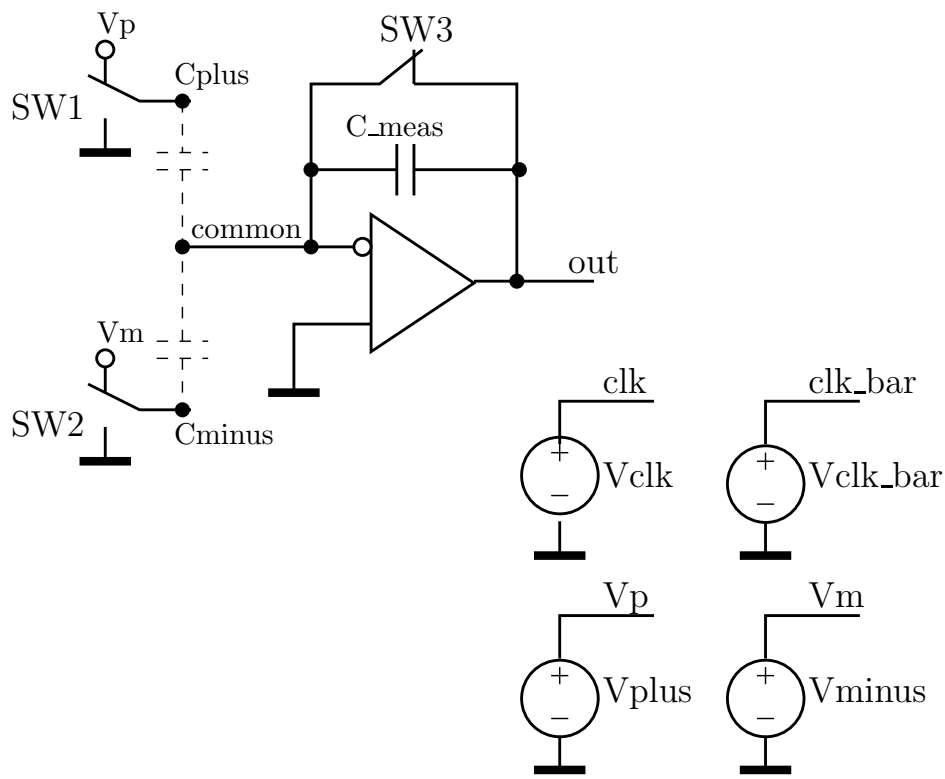

Switch position corresponds to clk='1'

FIGURE 2 – Switched capacitors readout circuit for the differential capacitance measurement. The position of the switches shown on the schematic correspond to the phase 1 (high) of the clock *clk*. The clock *clk_bar* is a logical complement of the clock *clk*. The high state of *clk_bar* puts the switches in the opposite states with regard to what is shown in the schematic.

Step 1. Starting from the cell *read_capacitance* provided by the instructor, complete the *schematic* of the read-out circuit by using the following components :

– For the switch : the component *switch* of the *analogLib* library,

– For the operational amplifier : the component *opamp* from the library *ahdlLib*.

– The voltage sources *vpulse* from the library *analogLib* for the clock generation,

– The DC voltage sources *vdc* from the library *analogLib*.

– For the capacitor $C_{measure}$, use the value 10 pF. *Step 2.* Simulate the circuit with a sinusoidal acceleration at the input, with 50 Hz frequency, with amplitude of 10, 20, 30 ms^{-2}. Observe the non-linearity of the response for high amplitudes of acceleration.

4 Discrete time signal processing

In order to compensate the problem of non-linearity of the response due to the non-linearity of the function $\Delta C(x)$, we implement a feedback operation. For that, we need to design a feedback corrector. A proportional-integral corrector is one of the most common configuration, that we will use. Its characteristic is given by :

$$V_{out} = K_p V_{in} + K_i \int V_{in} \mathrm{d}t. \tag{9}$$

Since our readout circuit generates a discrete time signal cadenced by the clock *clk_bar*, we can continue to use the switched capacitance technique for implementation of this circuit. The schematic is presented in fig. 3.

Theory. Write the equations relating the input and the output of the presented PI corrector.

Step 1. Starting from the schematic of the read-out circuit previously designed, draw the schematic of the PI corrector on the same *Schematic* sheet. Choose the capacitances values so to have Kp=10, Kint=0.1 s^{-1}, taking $C_{sh} = 1pF$, and the clock period of 10 μs.

Step 2. Apply to the input of the corrector the signal coming from the capacitance readout circuit, and simulate the cascade. Make sure that the clocks of the both circuits are well synchronized so that the correct values are passed from one cascade to another.

5 Sample-and-hold circuit

The integrator generates a discrete time signal, whose values are only valid when the clock is high. We need to use a sample-and-hold stage in order to obtain a signal with values valid all the time. For this project, we will use a sample-and-hold implementing a zero order interpolation. The proposed schematic is given in fig. 3.

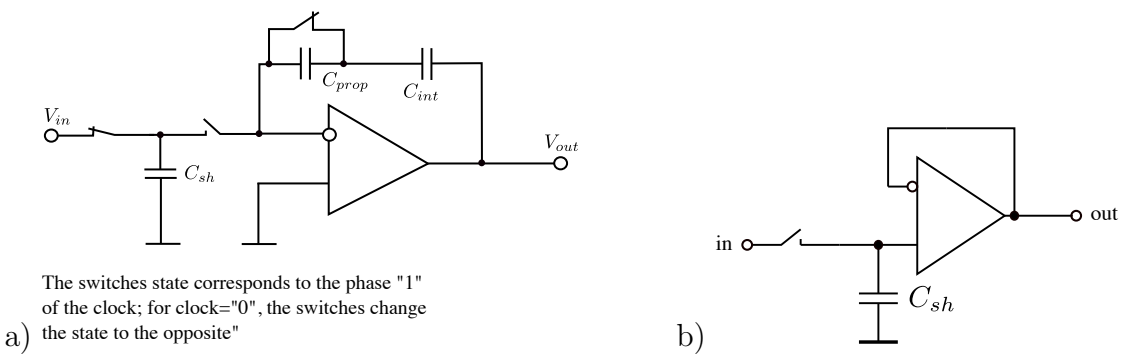

FIGURE 3 – Circuits used for the closed loop accelerometer : a) a linear proportional-integral corrector implemented with switched capacitors technique, b) a sample and hold circuit.

Implement the sample-and-hold (SH) circuit, connecting it directly after the PI corrector. At the output of the SH circuit, you must have a zero-order interpolated signal.

For the capacitance C_{sh}, take the value 10 pF.

6 Bibliographie

[1] B. V. Amini, R. Abdoulvand, F. Ayazi, A 4.5-mW closed-loop ΣΔ micro-gravity CMOS SOI accelerometer, IEEE journal of solid state circuits, vol. 41, no. 12, december 2006